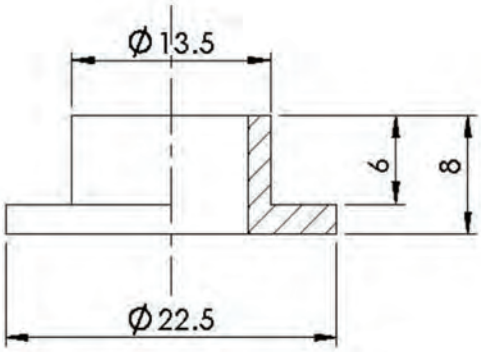

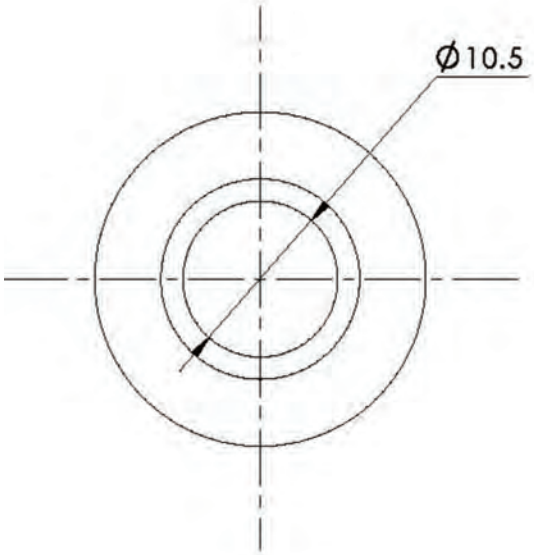

MATERIAL: SUS304
BUSH (SS)
97HH-E-12-B

speed spares
[CONTAINERSPAREPARTS]