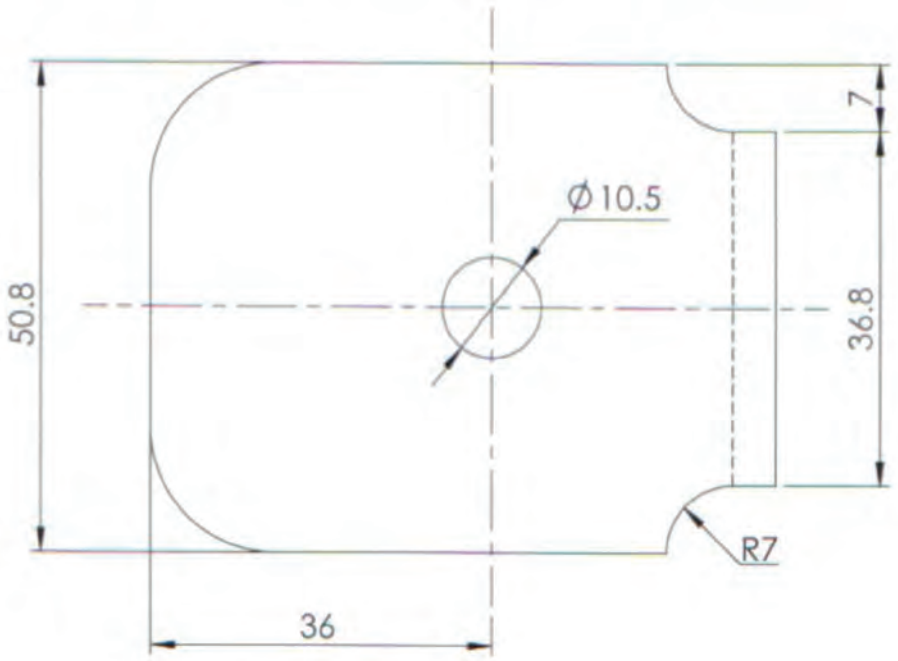

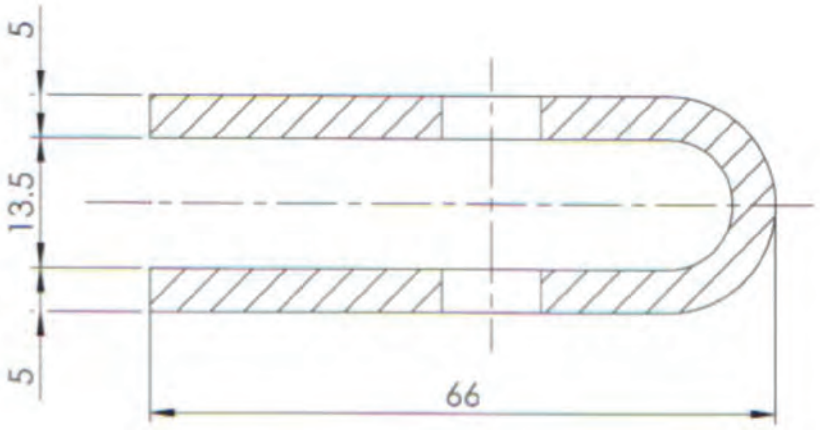

speed spares
[CONTAINERSPAREPARTS]

HANDLE HUB
97HH-E-13-A