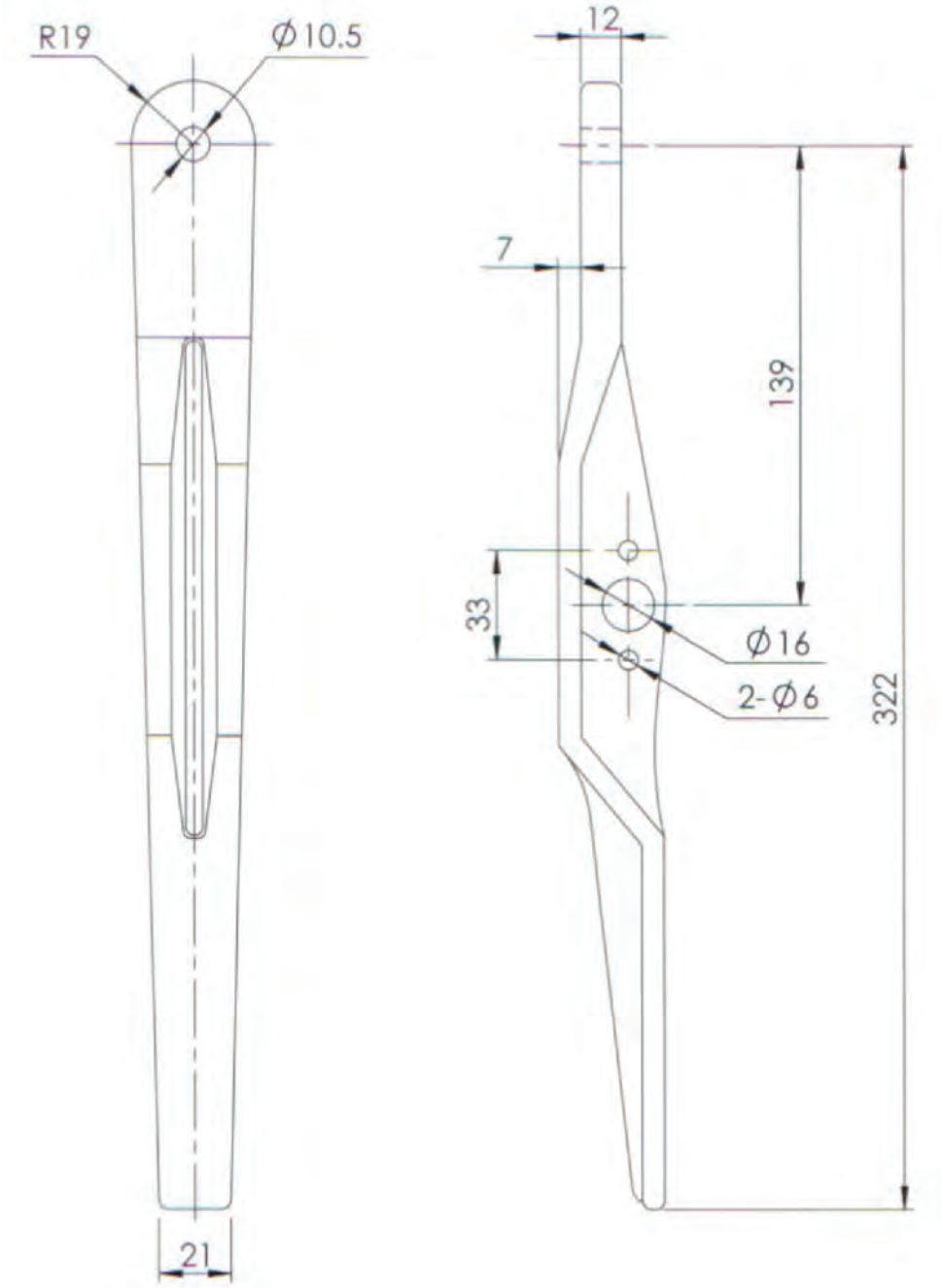

speed spares
[CONTAINERSPAREPARTS]

FORGED HANDLE
97HH-E-05-1