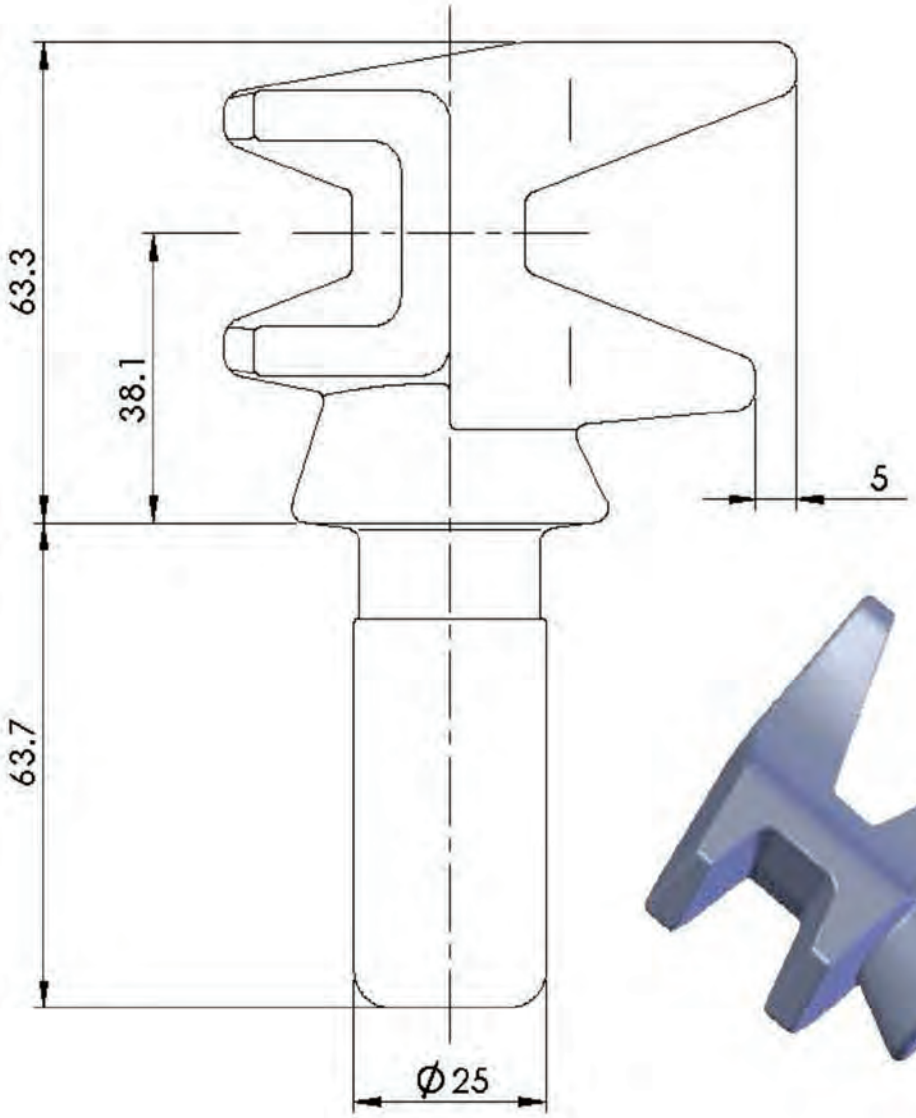

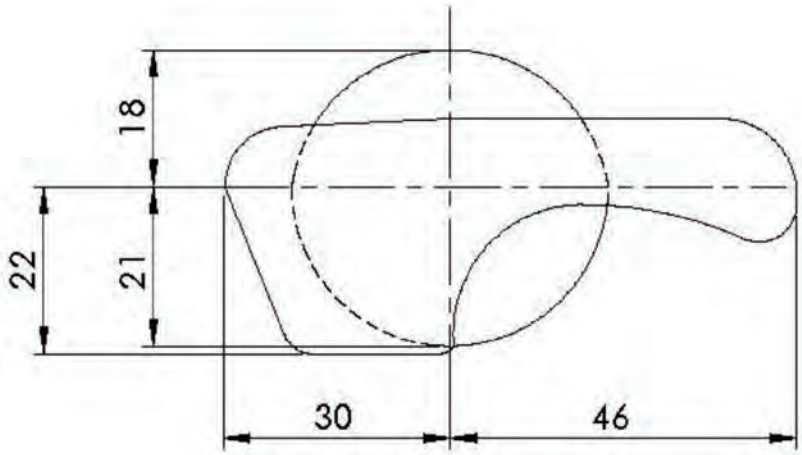

speed spares
[CONTAINERSPAREPARTS]

F-CAM R.H
97HH-E-02-4